Product code: RMRC-R31

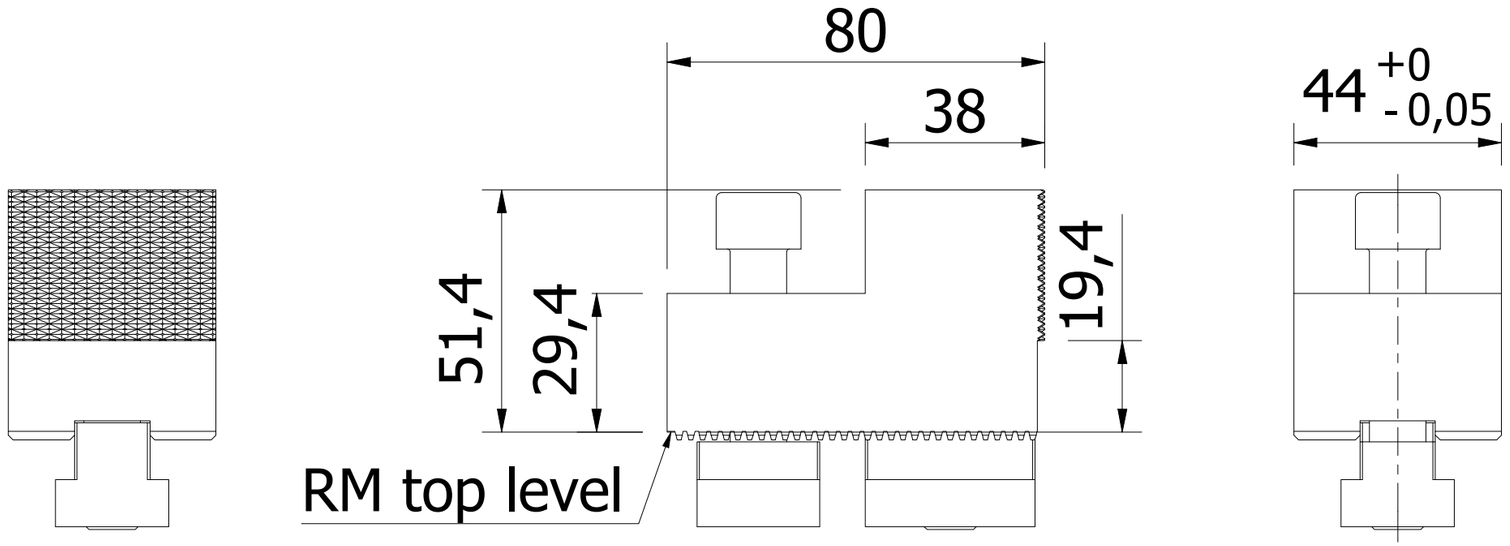

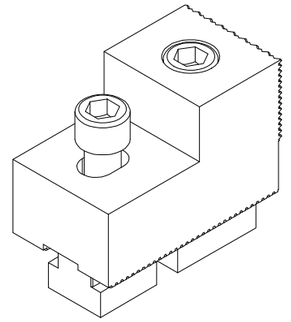

Product code: LOOK AT THE TABLE

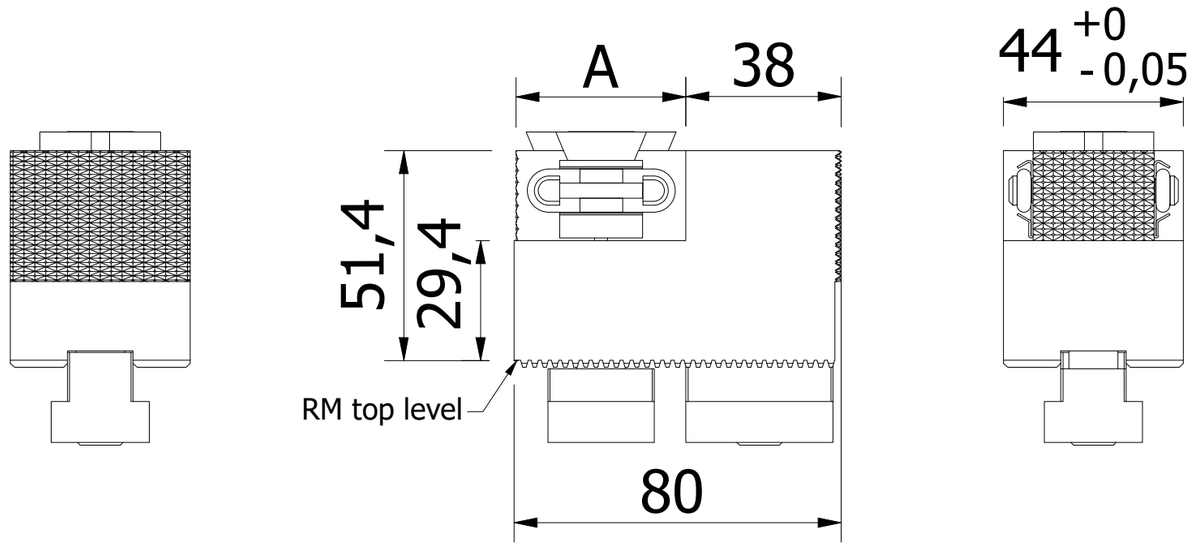

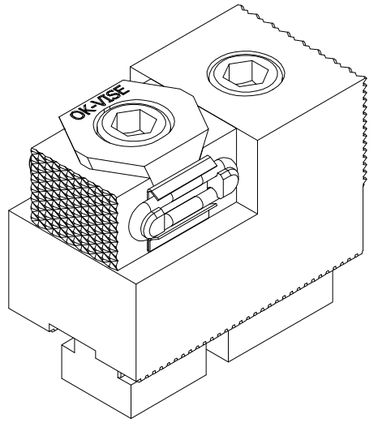

OK-VISE®

TABLE				
Type	JAW	A Min	A Optimum	A Max
RMC-DRSR3	Serrated	42	45	49

DIMENSIONS

Drawing name	Rev	Date
RMRC-R31_D.dwg		9.11.2026