PRODUCT CODE: RMS-BSR

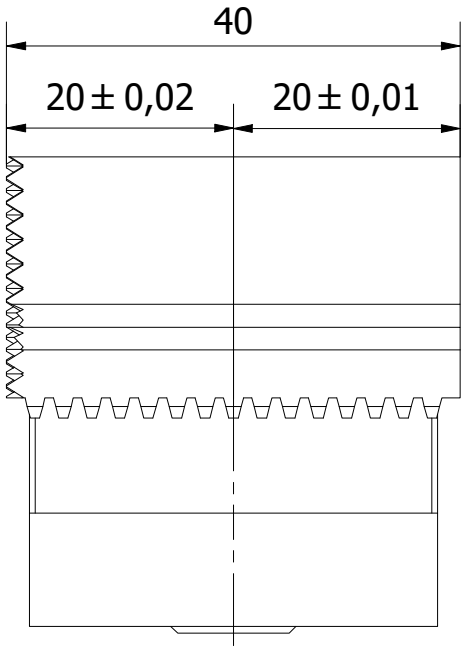

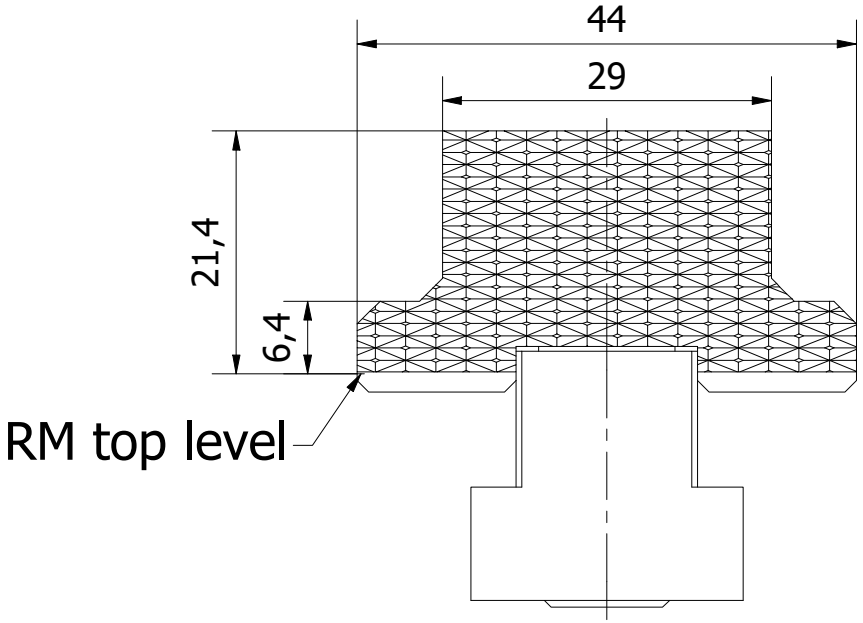

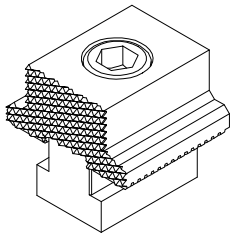

OK-VISE®

DIMENSIONS

Drawing name	Rev	Date
RMS-BSR_D.dwg	0	19.10.2026