PRODUCT CODE: RMS-BR

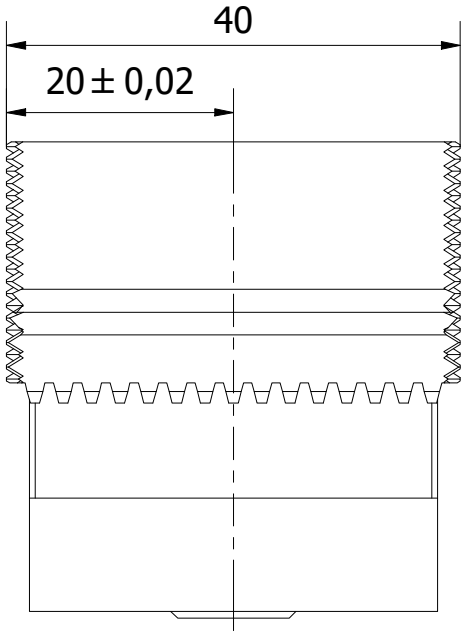

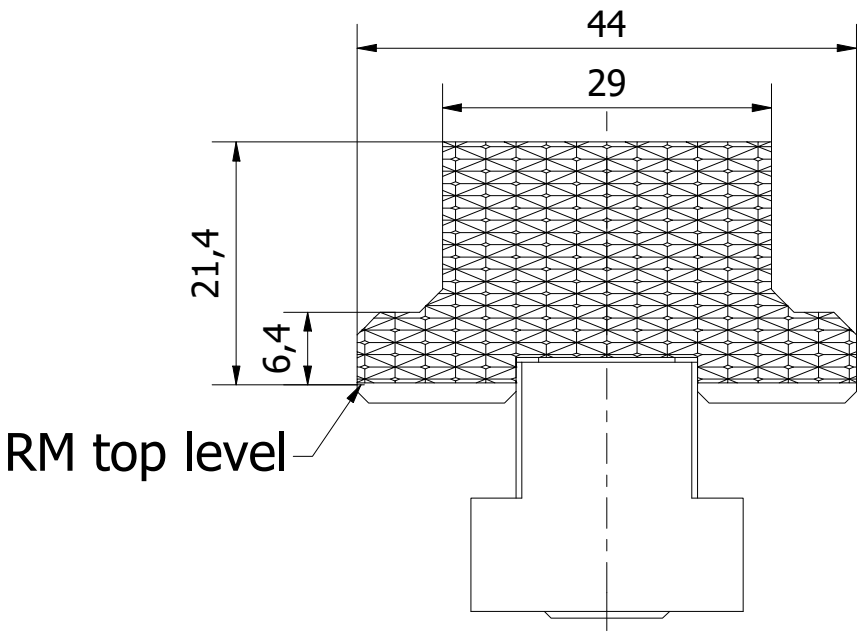

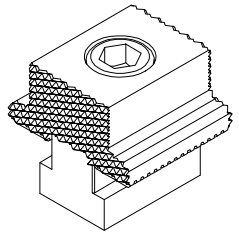

OK-VISE®

DIMENSIONS

Drawing name	Rev	Date
RMS-BR_D.dwg		19.10.2026