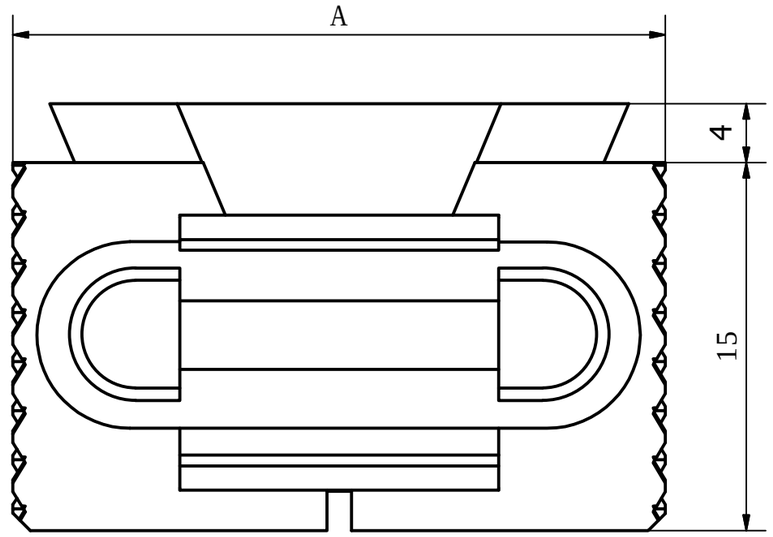

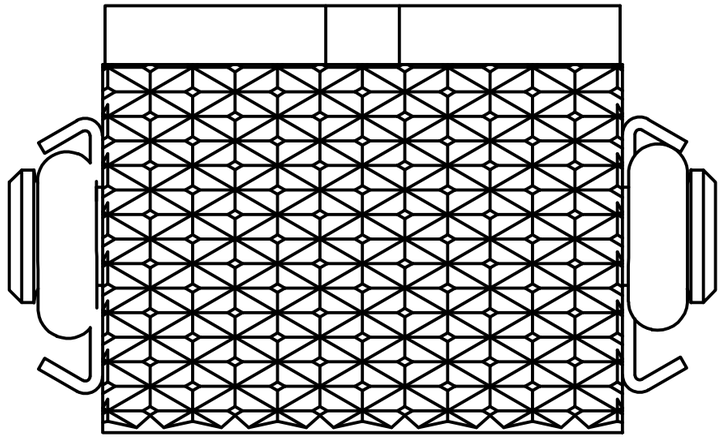

(4 : 1)

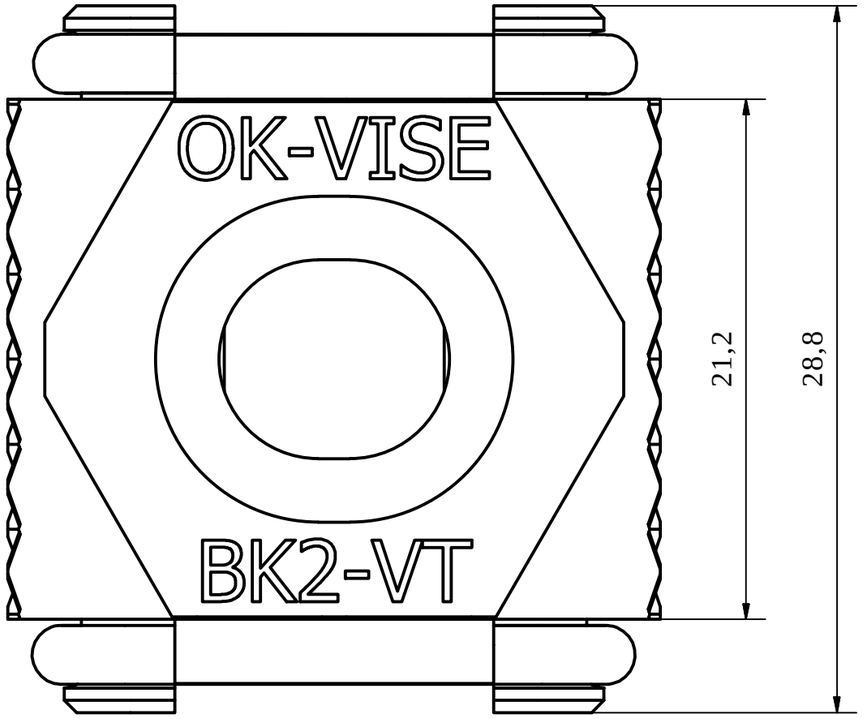

(2 : 1)

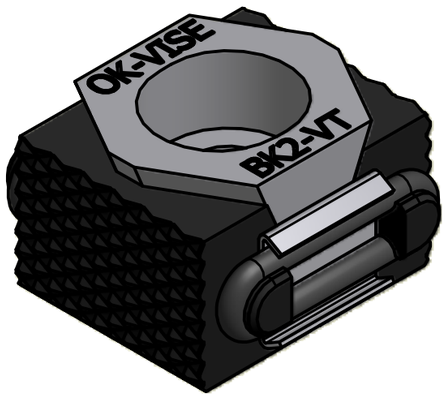

A		
MIN	OPTIMUM	MAX
27	30	33

OK - VISE MUURAME FINLAND	Material		Creation date 30.01.2023
	Tolerance SFS-EN 22768-1		Designed by tuuja
			Approved by
Title BK2-VT-O			Refers to
			No / Edition / Sheet 1 / 1